Procedure 2) – See Figure 3

Start the project by building the seat assembly first. Follow the step by step procedure as outlined in Figure 3. If you are using soft wood such as cedar or redwood, and drywall screws, you should not have to pre-drill the wood, however the use of fir may require pre-drilling. If so, then a 5/64" drill will work for drywall screws, or use a 3/32" for #8 screws, and 7/64" for #10 screws.

TIP: The use of a 'C' clamp will help in holding the pieces of wood together when inserting the screws. This assures the proper location is maintained and a tight fitting joint will result.

In step #1 & 2, keep all pieces flush to the top and front sides. In step #3 & 4 fasten the seat pieces A & K with one 1-1/2" screw at each end. In step #5, fasten the completed seat back to the base frame with only one 1-1/2" screw in each side (only one screw will allow you to adjust the angle to match the position of the arm rests in step #9, you can add two more per side later) – insert them from the inside into pieces B. Try to maintain the 100 degree angle of the seat back. This will be reinforced by the arm rests in step #9.

Procedure 3) – See Figure 4

As laid out in step #6, attach the arm rests E & F to the tops of the legs pieces H. Make sure to reverse E & F so you have a left and right assembly! The addition of a temporary brace in step #7 may assist in attaching the leg assembly to the seat base. Once the arm rests are fastened, the legs may be fastened to the seat base as indicated, use two 2-1/2" screws for each leg, driven in from the outside face of H (Step 8). Since you only installed one screw in step #5, the seat back will rotate somewhat so that you may align the arm rest with the back side of piece D (Step 9). Use two 1-1/2" screws through D into E & F from the inside of the back.

Procedure 4)

If you haven't done so, now you are ready to oil or stain the project. First make sure the seats and arms are sanded smooth so your friends don't go home with a sliver where they don't want one. Happy sunning –

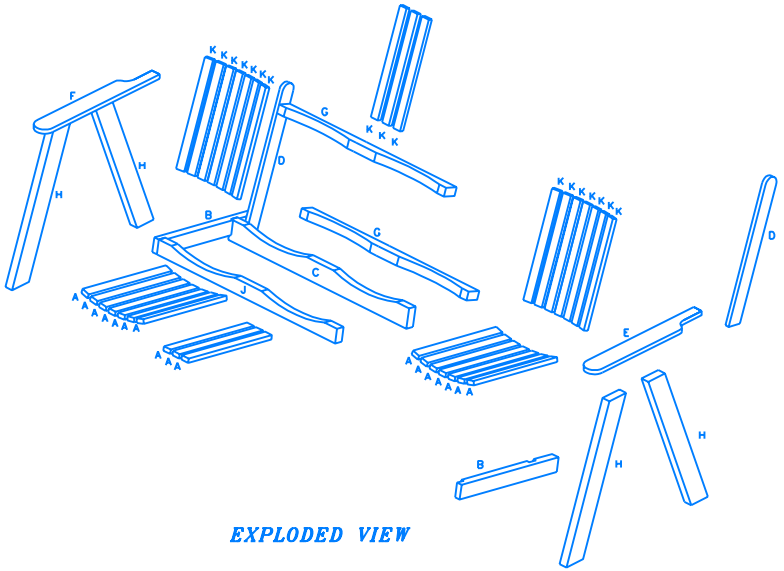

EXPLODED VIEW

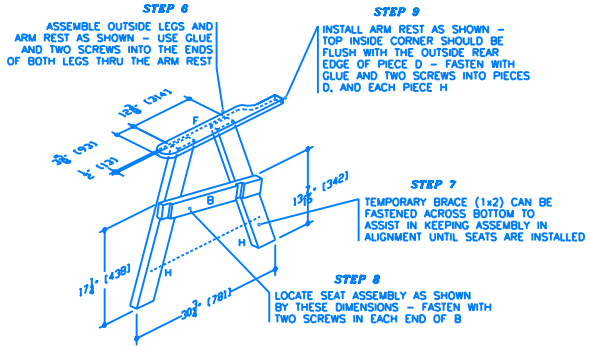

OUTSIDE ARM AND LEG ASSEMBLY FIGURE 4

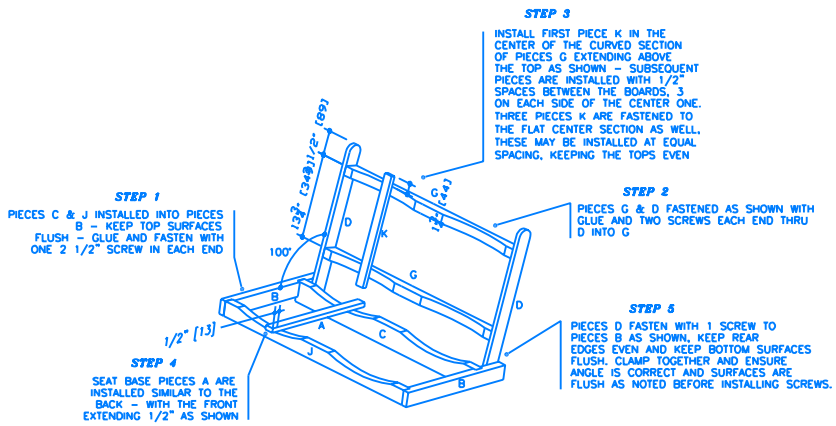

SEAT ASSEMBLY FIGURE 3

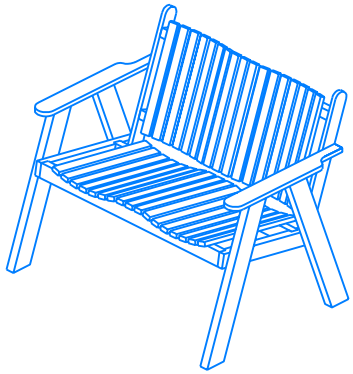

PATIO LOVE SEAT COMPLETED PROJECT FIGURE 5

PATIO LOVE SEAT – Project #219 (Side B)